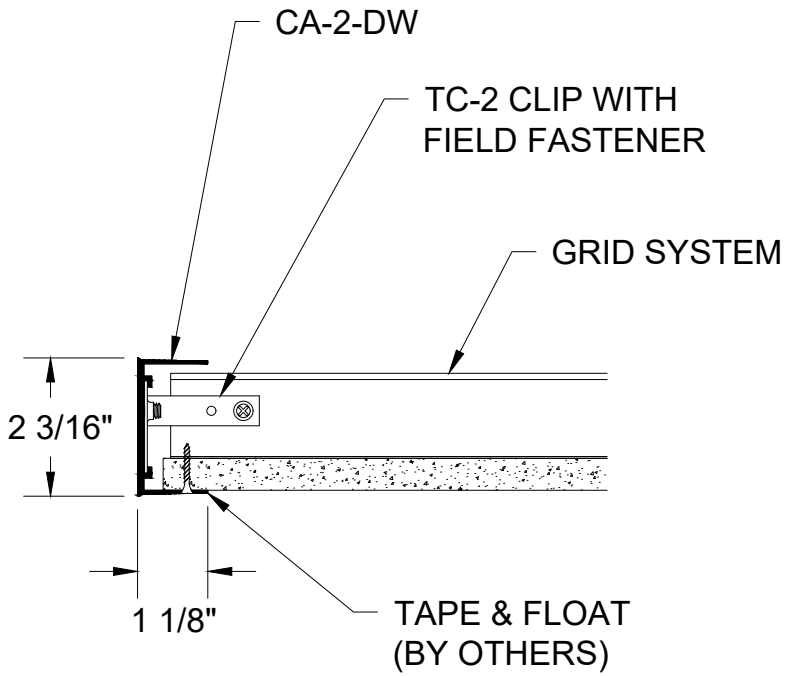

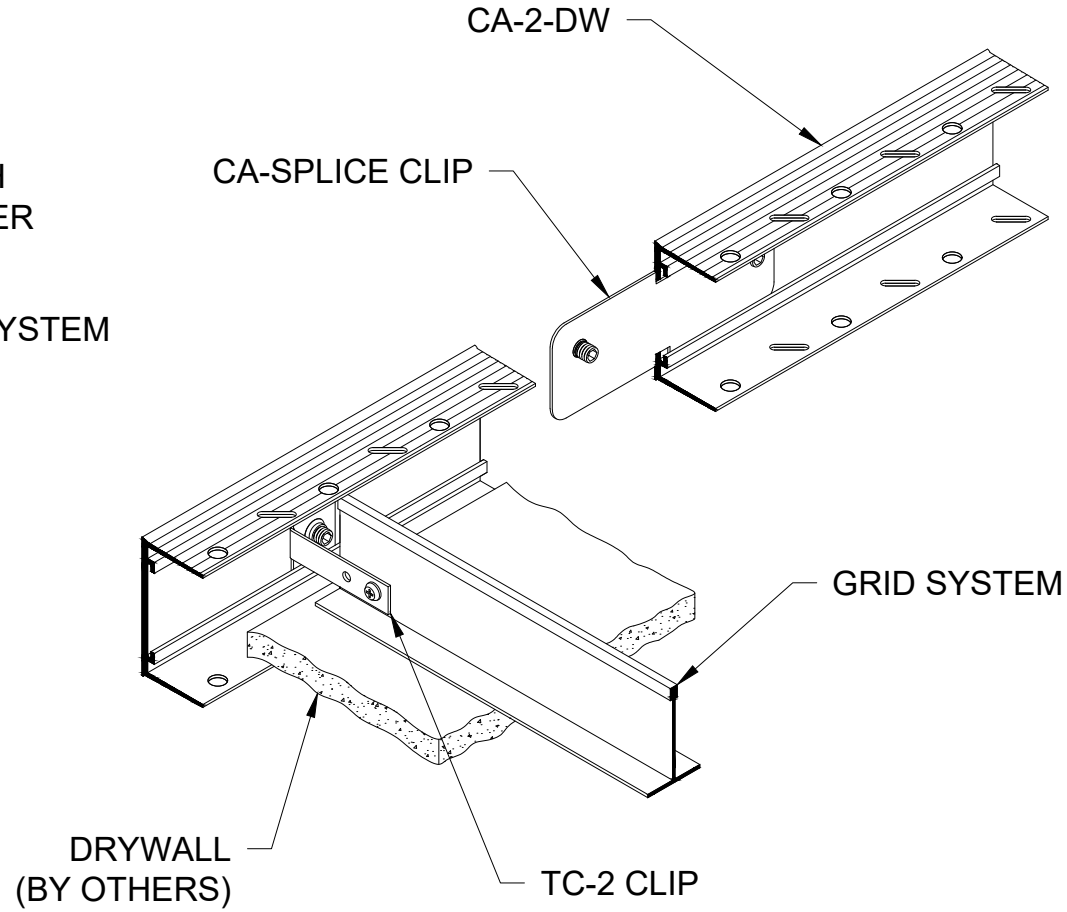

GORDON®
ARCHITECTURAL+ENGINEERED SOLUTIONS
5023 Hazel Jones Rd.
Bossier City, LA 71111
800.747.8954
GORDON-INC.COM
sales@gordon-inc.com

TRIMS & ESSENTIALS
CONTURA
CA-2-DW ASSEMBLY

WEB01442