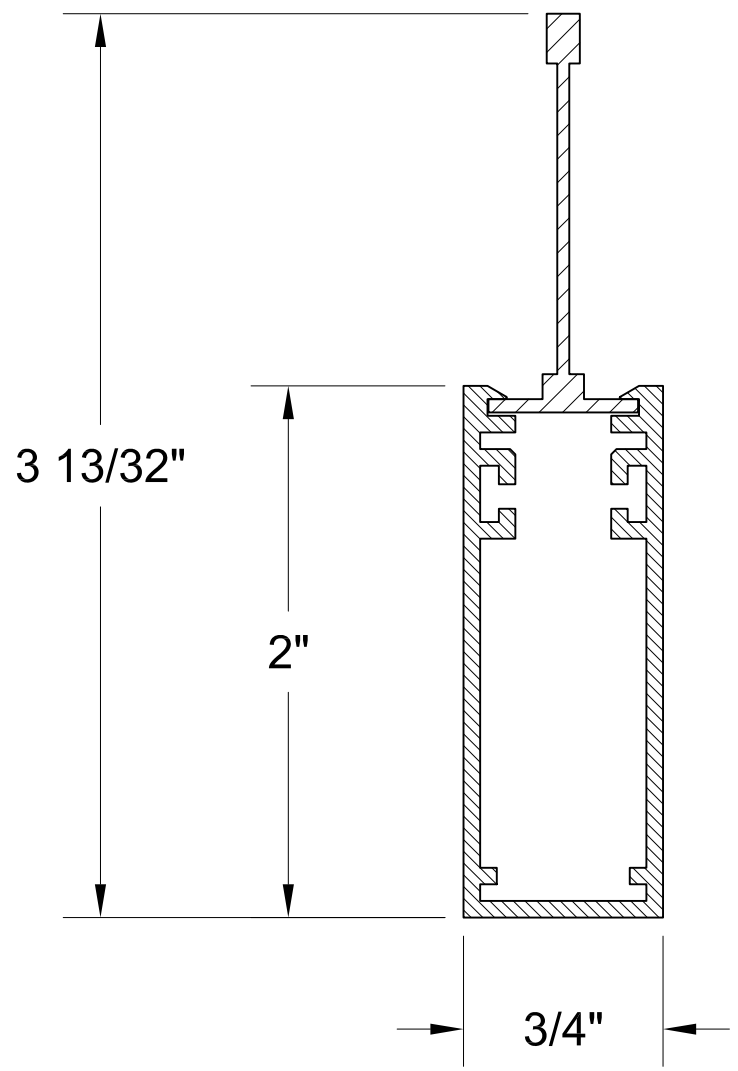

GORDON
INTERIOR SPECIALTIES DIVISION

5023 HAZEL JONES ROAD, BOSSIER CITY, LA 71111
800.747.8954
800.877.8746 FAX
SALES@GORDONCEILINGS.COM
GORDONCEILINGS.COM

TITLE

BEAM MATE
BM-342 PROFILE